RF CONNECTORS / FME

RFEPC01

FME PLUG
CRIMP
STRAIGHT

DIMENSIONS

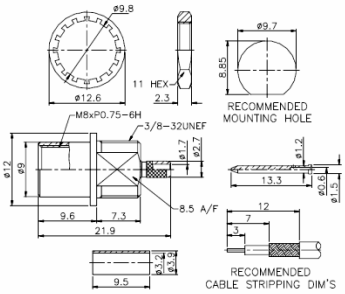

RFEJC01

FME JACK
CRIMP
STRAIGHT

DIMENSIONS

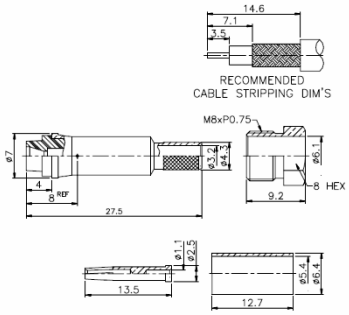

RFEPCB01

FME PLUG CRIMP
BULKHEAD
STRAIGHT

DIMENSIONS

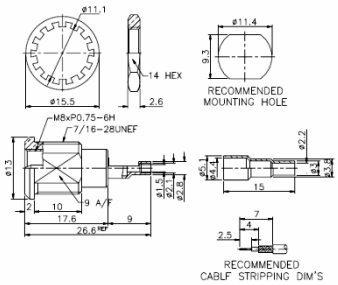

RFEJC02

FME JACK
CRIMP
STRAIGHT

DIMENSIONS

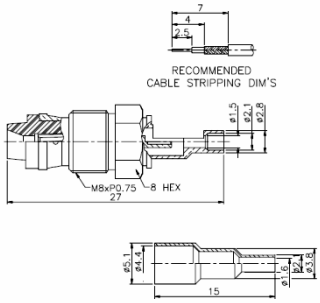

RFEPCB02

FME PLUG CRIMP
BULKHEAD
STRAIGHT

DIMENSIONS

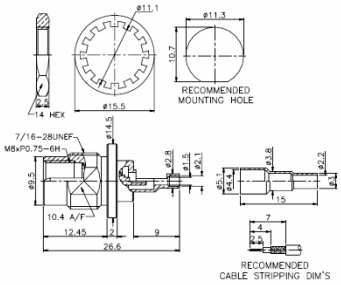

RFEPM01

FME PLUG
P.C.B. MOUNT
STRAIGHT

DIMENSIONS

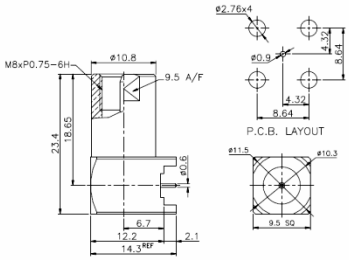

RFEPB01

FME PLUG RECEPT
BULKHEAD
STRAIGHT

DIMENSIONS

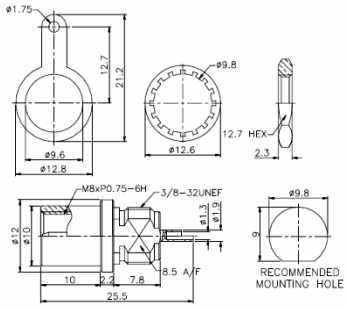

AFEP9FEP

FME ADAPTOR
PLUG TO PLUG
STRAIGHT
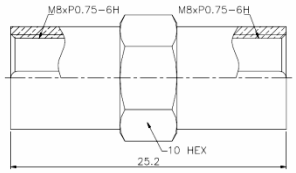
DIMENSIONS